PMC® SEMICONDUCTOR PACKAGE DIMENSIONS

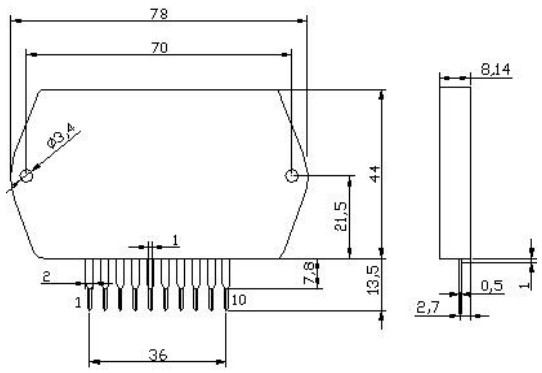

Unit: mm

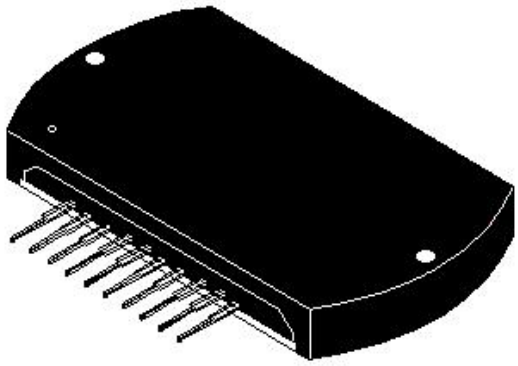

4007